We're more than just rulers!

Quilter's Rule®

A Division of Laser Excel
N6323 Berlin Road
Green Lake, WI 54941

# Nested Mini Circles Instructions

Special Key

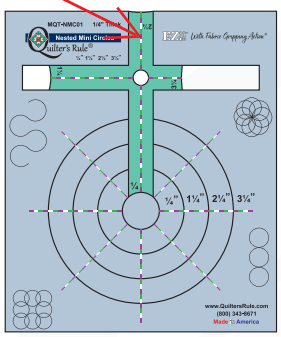

**MQT-NMC01**
¼" to 3¼"

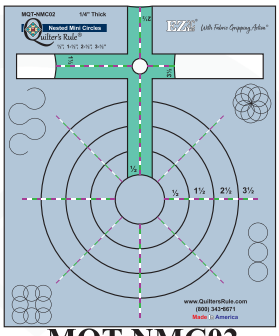

**MQT-NMC02**
½" to 3½"

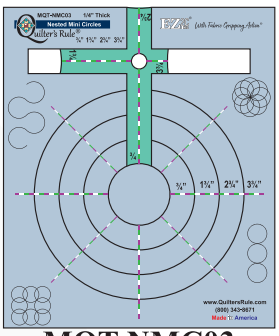

**MQT-NMC03**
¾" to 3¾"

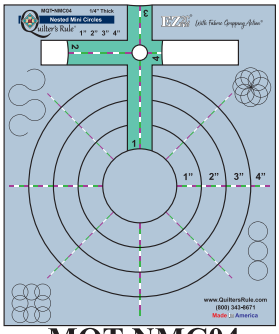

**MQT-NMC04**
1" to 4"

The Nested Mini Circles are designed for use on a machine (either sit-down, or mounted on a frame). If you are using the tools on a machine that moves, be sure to have a base such as an Extend-A-Base or ruler base attached to your machine. If you are on a machine that is stationary, you may find it helpful to put some type of agent such as Grip Stop Dots or spray adhesive on the templates. The dimensions of these tools are designed with the ½" round foot in mind. This means from outside edge to outside edge of the foot measures ½". If your foot is a different size, your stitched line will be slightly different than the stated measurement. The tools have been segmented into eight sections for ease in aligning the tool to create designs. Before using the tools, peel any film/paper masking from the templates so you can see through the clear plastic.

## *Concentric Circles*

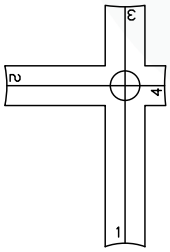

Remove key from template in order to position foot on the inside of the Nested Mini Circles. Replace key being sure to match key to circle desired.

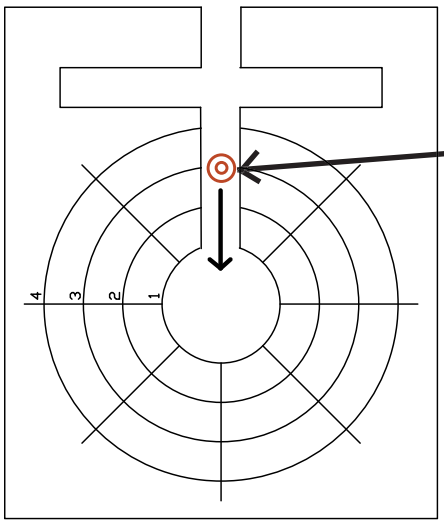


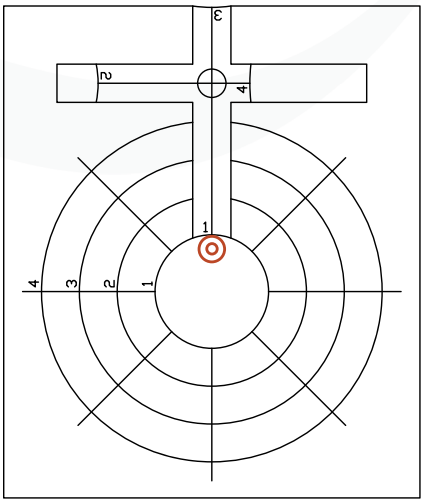

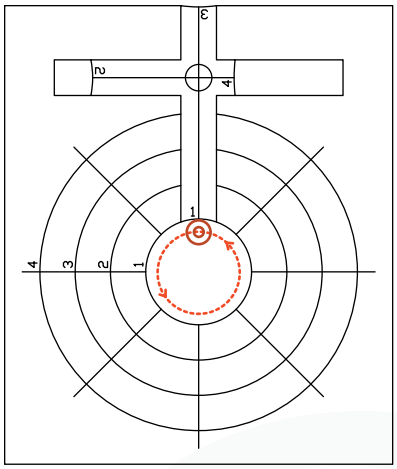

Stitch a complete circle.
Tie off thread.

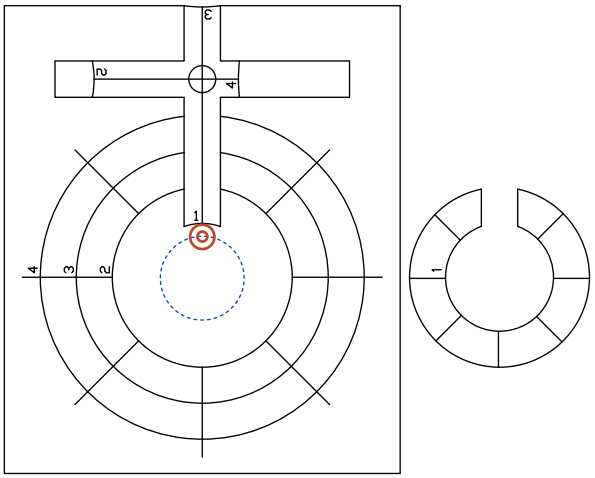

Remove first ring.

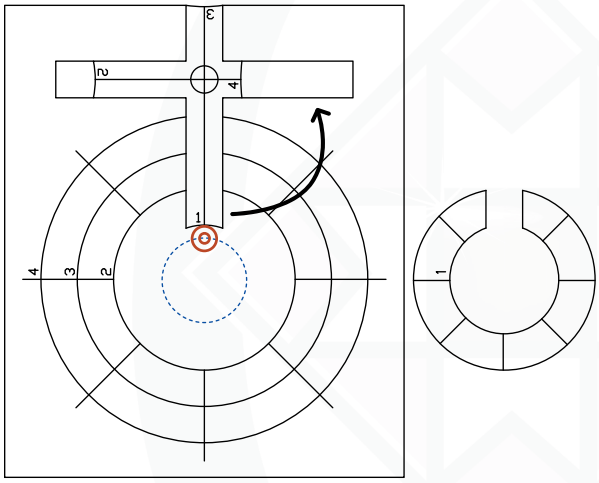

Turn key to match new circle size.

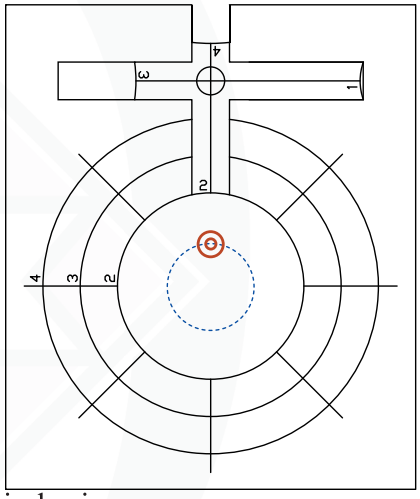

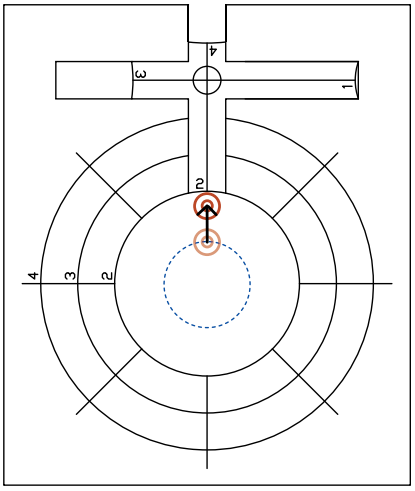

Move foot to edge of new circle.

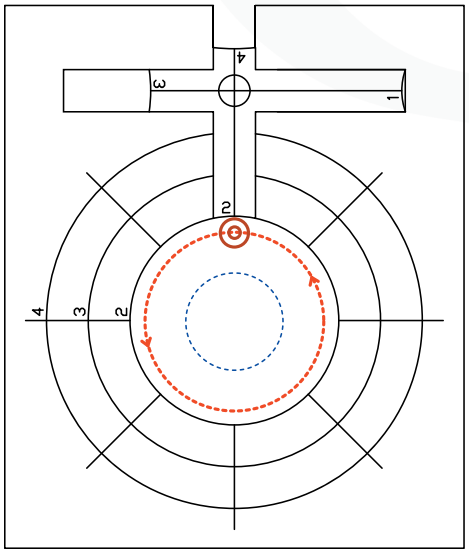

Stitch a complete circle. Tie off thread.

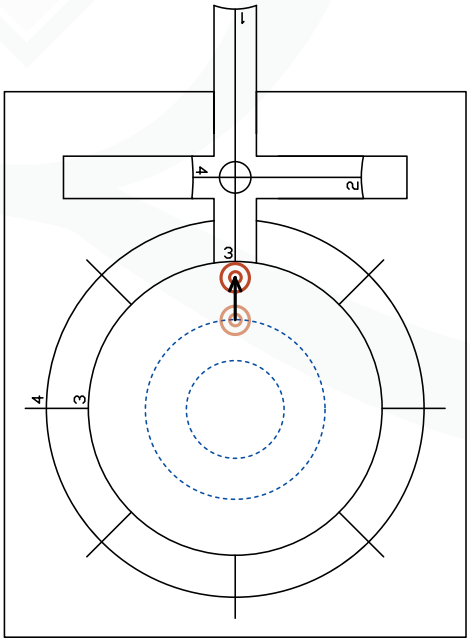

Remove second ring. Turn key to match new circle size. Move foot to edge of new circle.

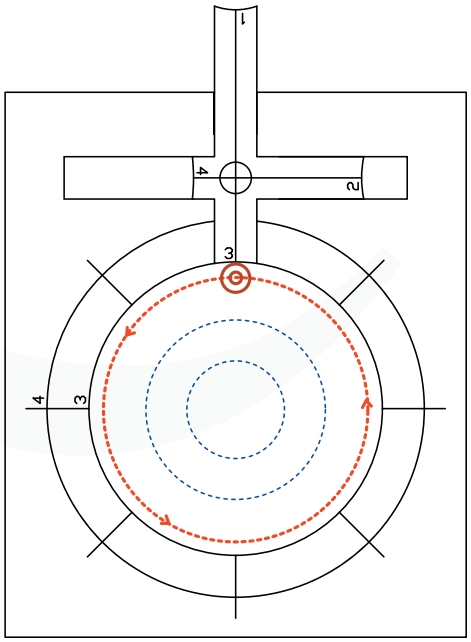

Stitch a complete circle.

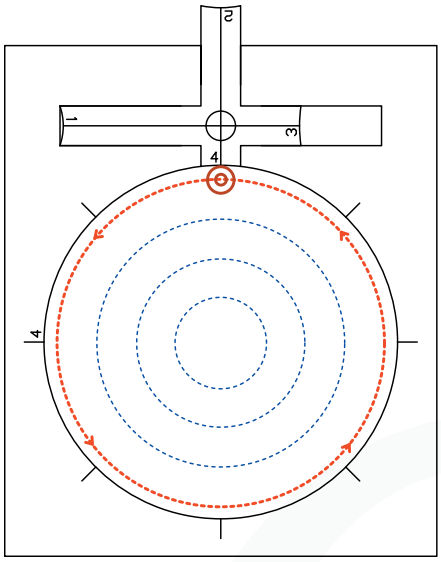

Remove third ring. Turn key to match new circle size. Move foot to edge of new circle. Stitch complete circle.

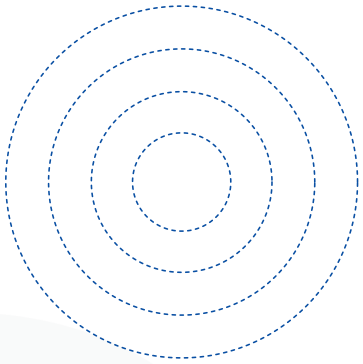

Completed design of four concentric circles ½" apart.

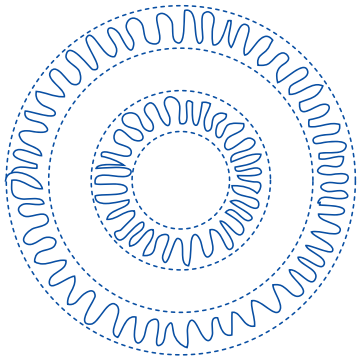

You can fill any of your circles for a faux trapunto effect.

## *Connected (Psychedelic) Circles*

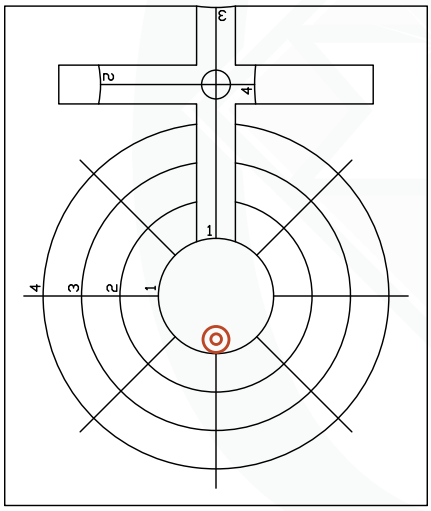

Remove key from template in order to position foot on the inside of the Nested Mini Circles. Replace key being sure to match key to circle desired. Position foot at the bottom of the circle.

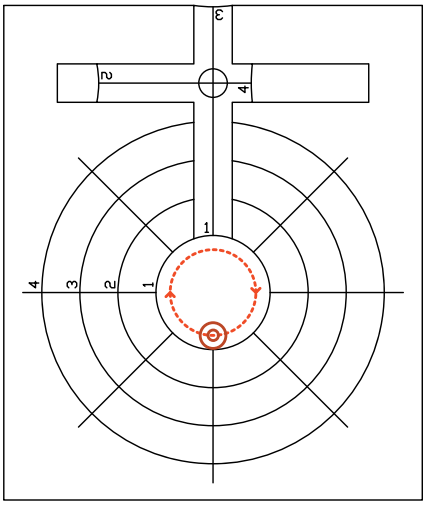

Stitch a complete circle. Needle down.

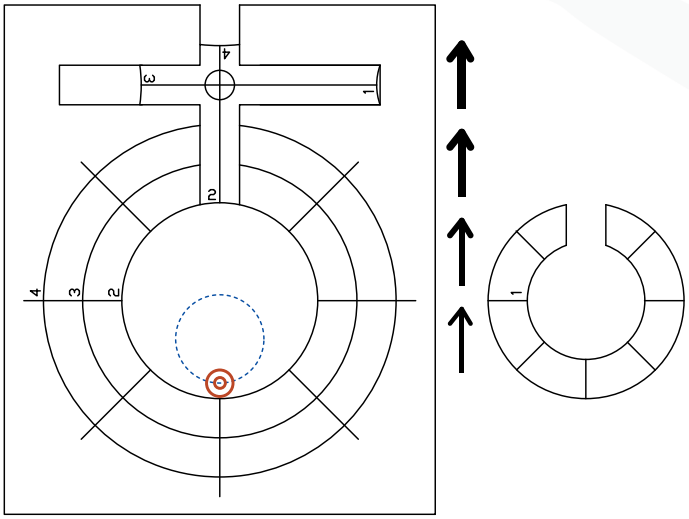

Remove first ring. Turn key to match new circle size. Slide template to foot position.

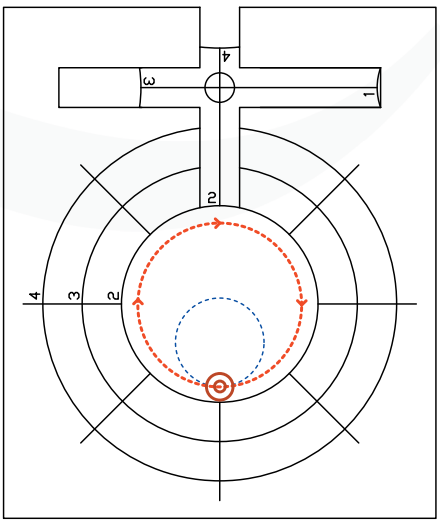

Stitch a complete circle. Needle down.

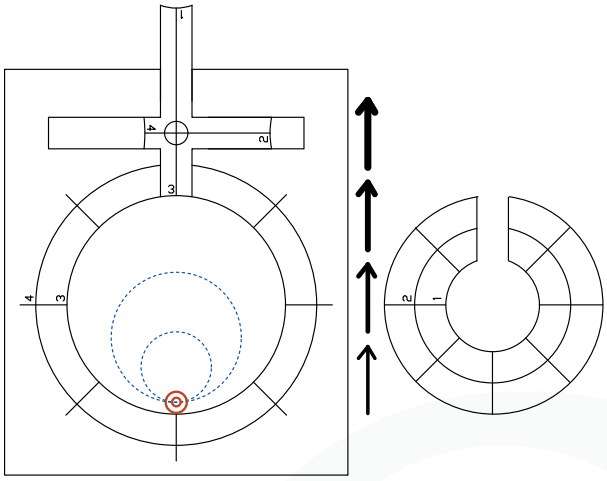

Remove second ring. Turn key to match new circle size. Slide template to foot position.

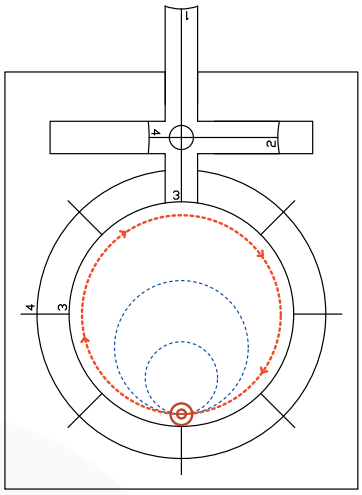

Stitch a complete circle.

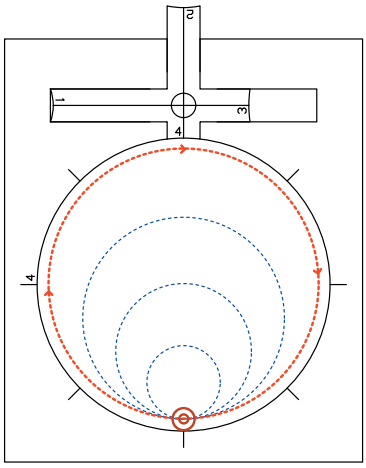

Remove third ring. Turn key to match new circle size. Slide template to foot position. Stitch complete circle.

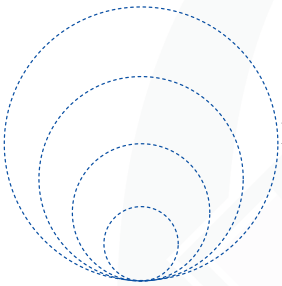

Completed Psychedelic Circles.

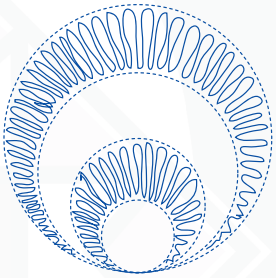

You can fill any of the areas for a faux trapunto effect.

## *Spyrographing Circles*

You will be using the etched lines on the template to keep your design even and consistent. You will need to have lines or seams (shown in purple dashes) on the block where the design is to be stitched. If there are no seams, (for instance: A blank block as opposed to a four patch), use a stencil to pounce in a grid, or use a ruler to draw in a set of cross hairs on the block. Line template up with one edge of the circle on the center point of the block and the etched line running straight up the key on the vertical line of the crosshairs. The etched line opposite the key should be on the same vertical line.

**Tip:** The first time you do this, it is easiest with the largest size. If you use one of the smaller sizes, you might find it helpful to use blue painter's tape to help hold the pieces when moving the template.

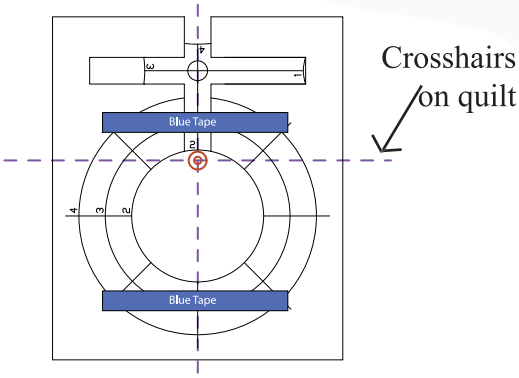


Pick a circle size. Remove key from template in order to position foot on the inside of the Nested Mini Circles. Replace key being sure to match key to circle desired.

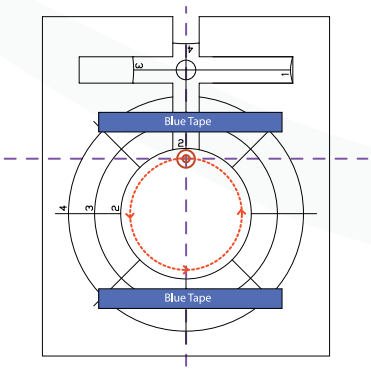


Starting at the center of the block, stitch a complete circle. Needle down.

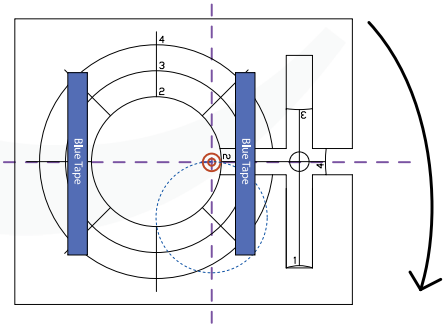


Rotate the template to the horizontal crosshair as shown above.

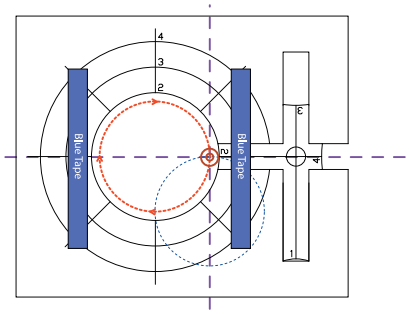


Starting at the center, stitch a complete circle. Needle down.

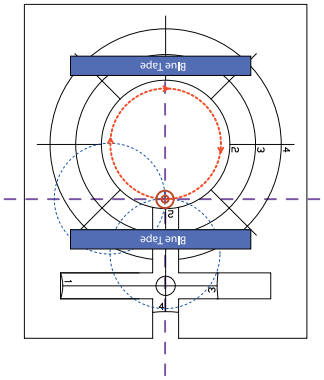


Rotate the template to the vertical crosshairs as shown above and stitch a complete circle. Needle down.

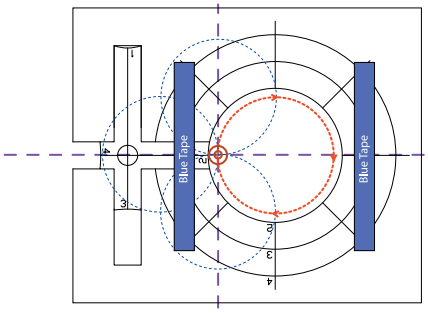


Rotate the template to the horizontal crosshairs as shown above and stitch a complete circle.

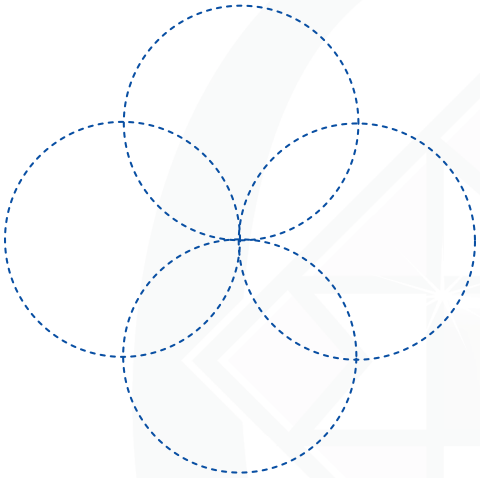

Completed Spyrographing Circles.

Variation: Combine Psychedelic Circles and Spyrographing Circles for a really fun look. Start by spyrographing the smallest circle and then work your way up to the largest.

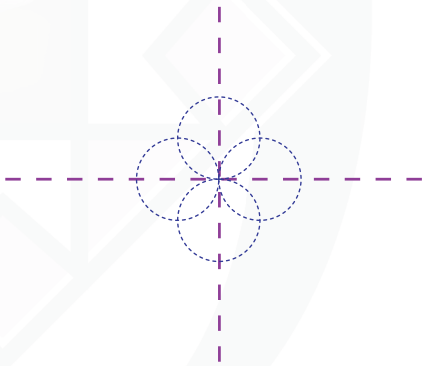

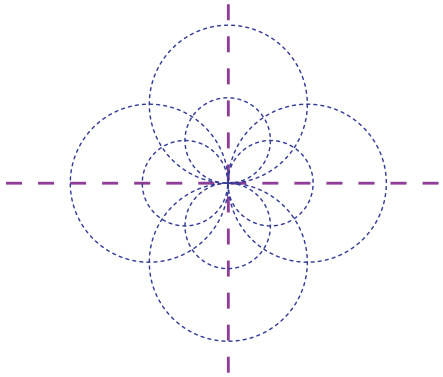

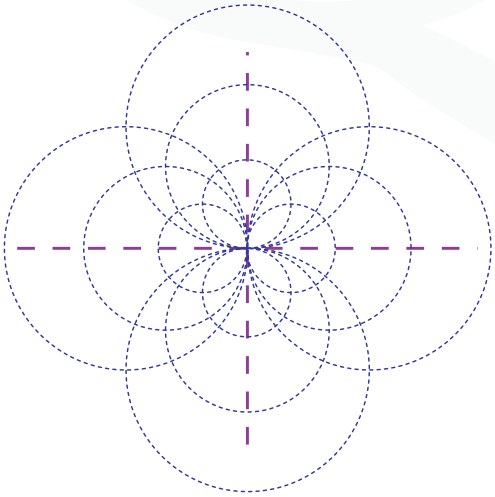

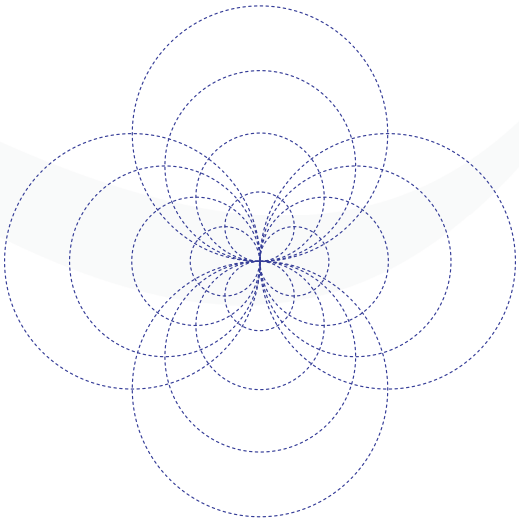

Finished variation.

## *String of Pearls*

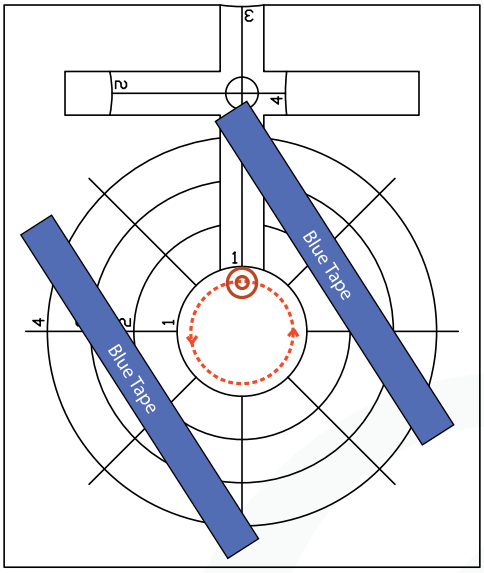


Pick a circle size. Remove key from template in order to position foot on the inside of the Nested Mini Circles. Replace key being sure to match key to circle desired. If you use one of the smaller sizes, you might find it useful to use blue painter's tape to help hold the pieces when moving the template. Stitch a complete circle. Needle down. See drawing to the left. Slide template to foot position as shown on the right.

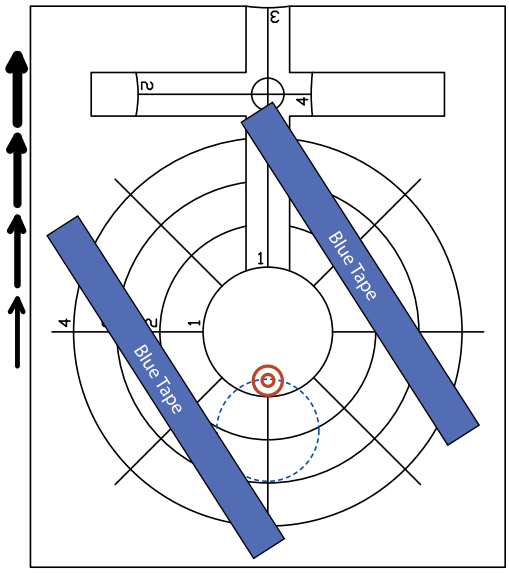


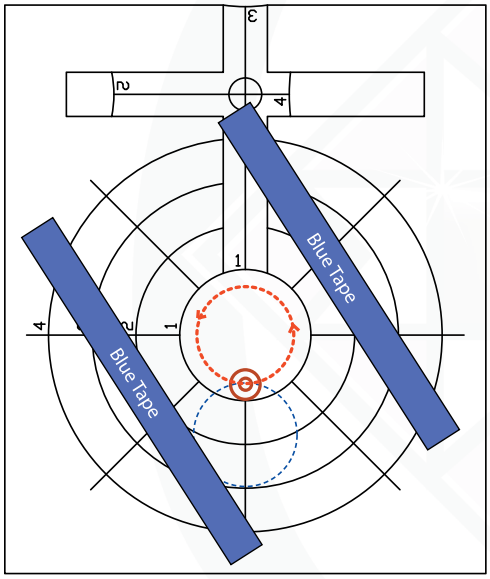


Stitch a complete circle.

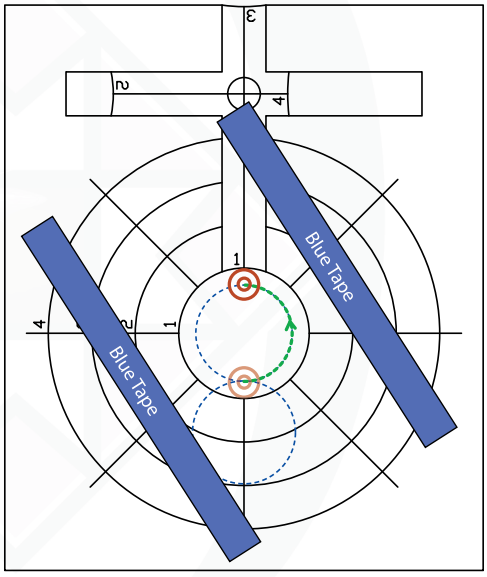


Stitch a half circle over already stitched area so that the foot is positioned to continue along path. Needle down.

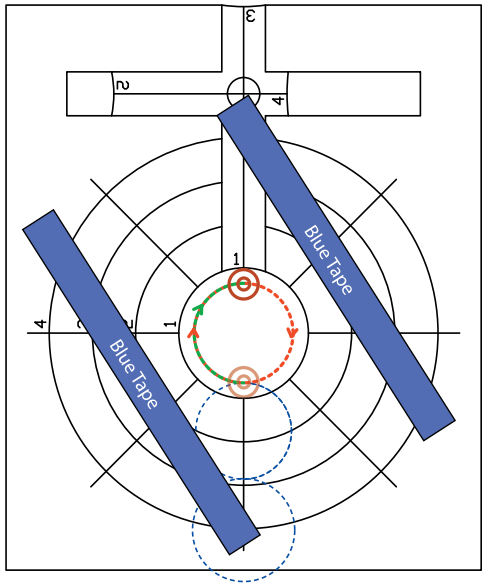


Stitch 1½ circles. Needle down. Continue until design is desired length.

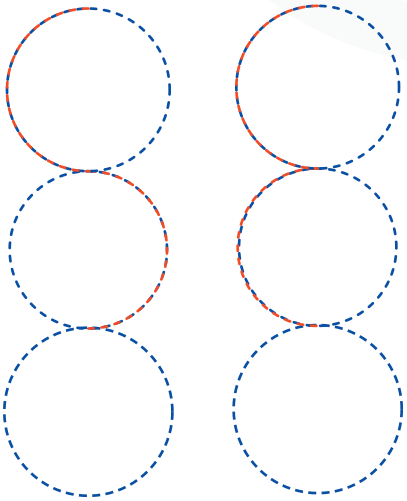

Variation: You can choose to have all the "double" stitched areas (shown in red) on the same side or opposite sides.

## *Interlocking Circles*

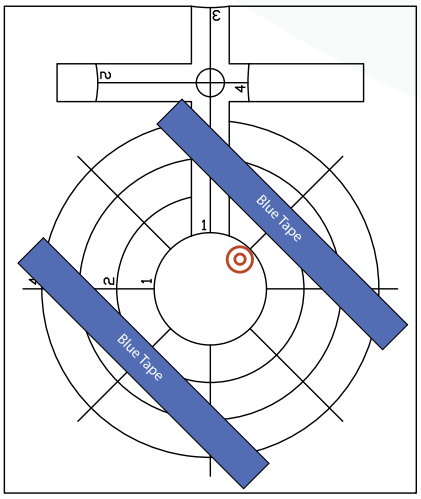


Pick a circle size. Remove key from template in order to position foot on the inside of the Nested Mini Circles. Replace key being sure to match key to circle desired. If you use one of the smaller sizes, you might find it useful to use blue painter's tape to help hold the pieces when moving the template. We will be using the diagonal lines etched into the template, so be sure you can see these lines for reference. If you are not stitching the interlocking circles along a seam, you may find it helpful to have a line marked which you can line up the center of the circles upon. Start with your foot on one of the etched diagonal lines. In the illustration to the left we are using the upper right diagonal.

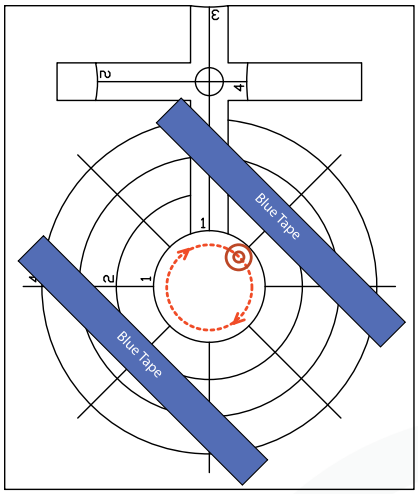


Stitch a complete circle. Needle down.

**Tip:** If you are positioning the foot on the right side of the template and going up, you will want to do counter clockwise circles. If you are positioning the foot on the left side of the template and going up, you will want to do clockwise circles. Going down it is the opposite.

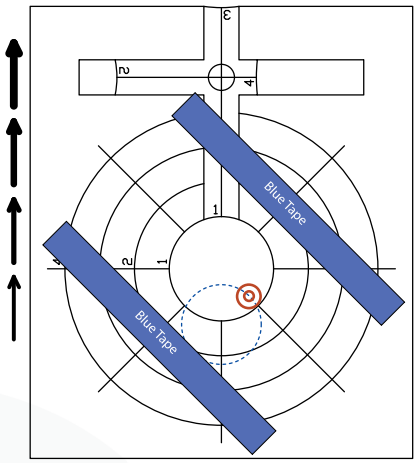


Slide template up until the bottom right diagonal is against the foot.

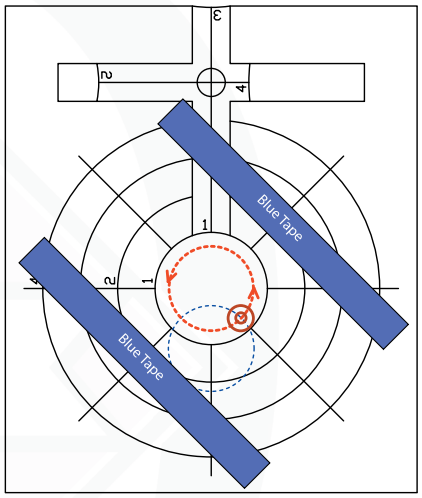


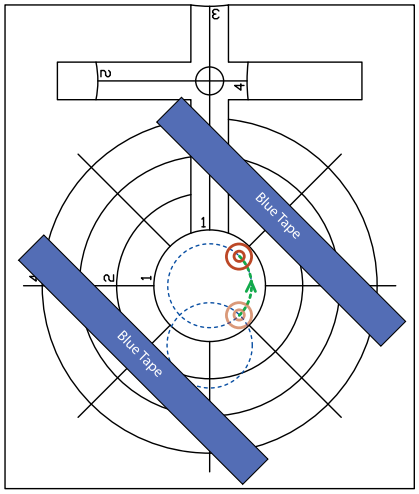


Stitch a complete counter-clockwise circle. Continue stitching until you have reached the upper right diagonal. Needle down. You'll stitch 1¼ circles stitching over a ¼ of the circle twice.

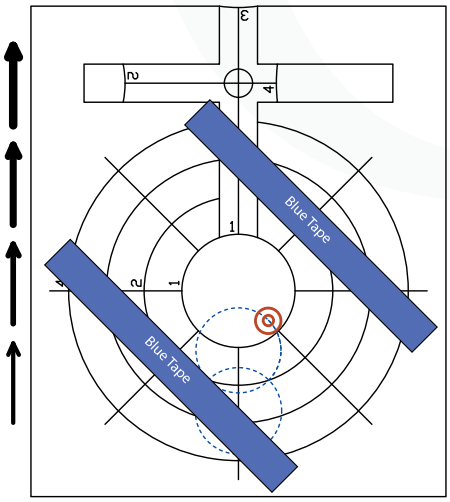


Slide template up until the bottom right diagonal is against the foot.

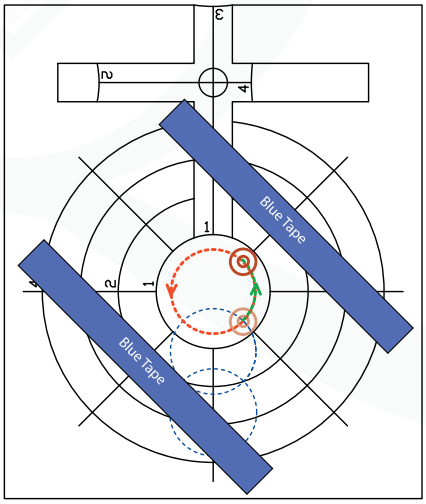


Stitch 1¼ counter-clockwise circle. Needle down. Continue circles until desired length.

## *Turning Corners*

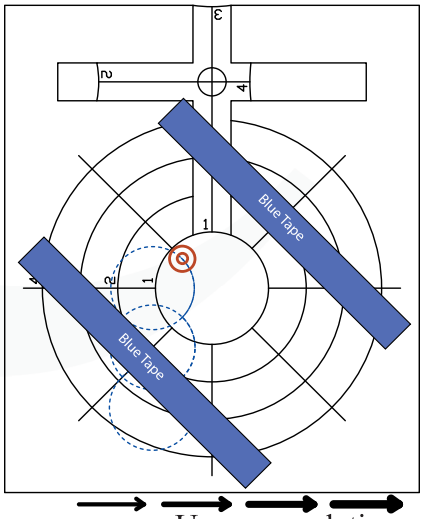


To turn a corner: Upon completion of a circle your foot should be at one of the upper diagonals. In our case, the upper right diagonal. Slide your template until the upper left diagonal is at the foot position.

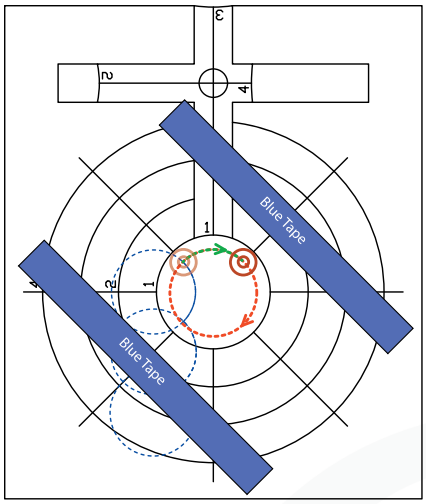


Stitch a 1¼ clockwise circle, stopping at the upper right diagonal. Needle down. Slide template to the right until upper left diagonal is at the foot position. Continue circles until desired length.

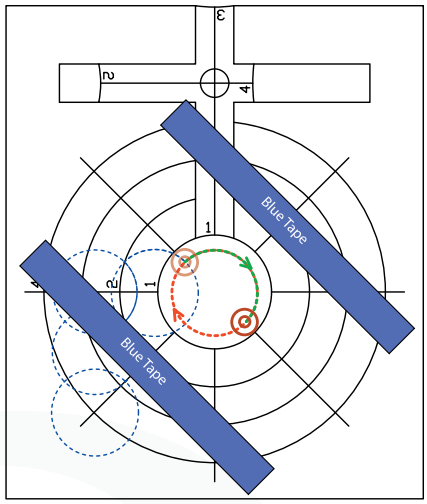


To turn corner again (going down) Stitch 1½ clockwise circles stopping at lower right diagonal. Needle down.

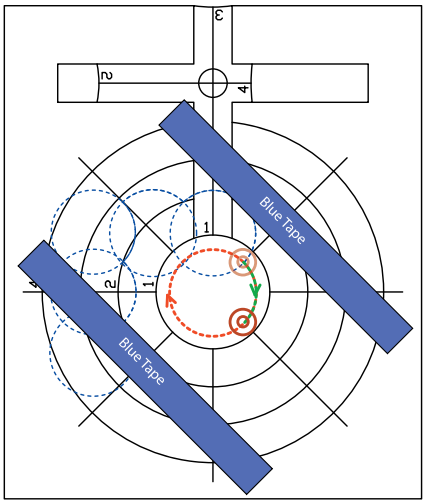


Slide template down until upper right diagonal is at foot position. Stitch 1¼ clockwise circles. Needle down. Slide template down until upper right diagonal is at foot position. Continue circles until desired length.

**Tip:** When moving horizontally, if you are moving to the left, stitch counter-clockwise circles; if moving to the right, stitch clockwise circles.

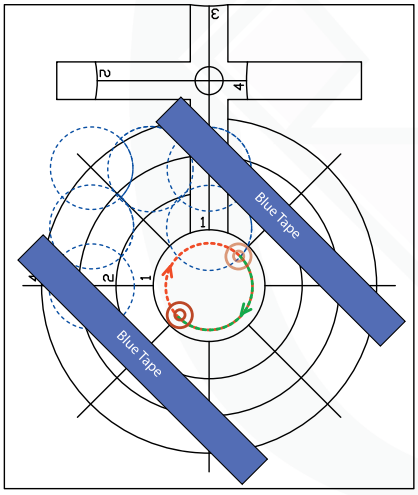


To turn corner again (going left), stitch 1½ clockwise circles, stopping in lower left diagonal. Needle down. See drawing to the left. As shown on the right, slide template to the left until lower right diagonal is at the foot position. Stitch a 1¼ clockwise circle. Needle down. Continue circles until desired length.

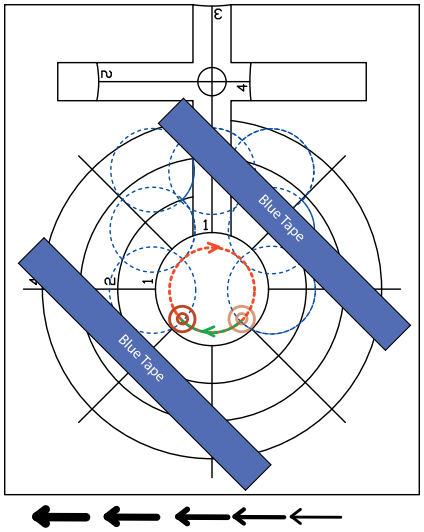


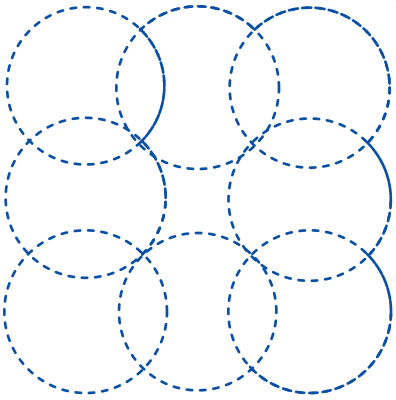

Completed Interlocking Circles.

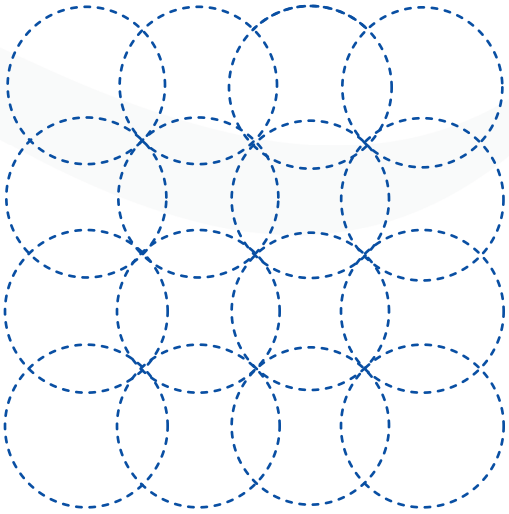

This tool will work well for Orange Peel as well.